# INDUSTRIAL RTD'S

| | CODE | HEAD EXTENSION |
|---|---|---|
| A | 2 | NIPPLE (NOTE 1) |
| | 4 | NIPPLE/UNION/NIPPLE (NOTE 1) |

| | CODE | CONNECTION HEAD | | |
|---|---|---|---|---|
| | | MATERIAL | TYPE | NEMA |
| B | AN | ALUMINUM | WATER PROOF | 4 |
| | SN | STAINLESS STEEL | WATER PROOF, CORROSION RESISTANT | 4, 4X |
| | AE | ALUMINUM | EXPLOSION PROOF (NOTE 2) | 4 |
| | SE | STAINLESS STEEL | EXPLOSION PROOF, CORROSION RESISTANT (NOTE 2) | 4, 4X |
| | XD | ALUMINUM | EXPLOSION PROOF, FM, CSA APPROVED (NOTES 2 & 3) | 4, 4X |
| | A | CAST IRON | WEATHER PROOF, RUGGED | |
| | L | POLYPROPYLENE | WEATHER PROOF, LIGHT WEIGHT | |
| | AX | ALUMINUM, LARGE DEVICE, EPOXY COATED | EXPLOSION PROOF, ATEX APPROVED (NOTE 3) | 4 |

| | CODE | CONDUIT OPENING |
|---|---|---|
| C | | 1/2 or 3/4NPT |

| | CODE | TUBE OPENING |
|---|---|---|
| D | 1/2 | 1/2NPT |

| | CODE | "A" LENGTH |
|---|---|---|
| E | | IN INCHES |

| | CODE | STRUCTURE |
|---|---|---|
| F | | SINGLE (LEAVE BLANK) |
| | D | DUPLEX |

| | CODE | SHEATH DIAMETER (STANDARD 316 STN. STL.) (NOTE 4) |
|---|---|---|
| G | 316 | 3/16" (.187) |
| | 14 | 1/4" (.250) |

| | CODE | ELEMENT TYPE (NOTE 4) | | | |
|---|---|---|---|---|---|
| | | STANDARD | MATERIAL | TCR | RESISTANCE @ 0° C. |
| H | | DIN 43760 | PLATINUM | .00385 | 100 OHMS (LEAVE BLANK) |
| | PT5 | DIN 43760 | PLATINUM | .00385 | 500 OHMS |
| | PT1 | DIN 43760 | PLATINUM | .00385 | 1000 OHMS (LT RANGE ONLY) |
| | JIS | JIS-C-1604-81 | PLATINUM | .003916 | 100 OHMS |
| | SA | RC21-4-1966 | PLATINUM | .003923 | 98.129 OHMS |
| | CU | | COPPER | .00427 | 10 OHMS (LT RANGE ONLY) |
| | NI | | NICKEL | .00672 | 120 OHMS |

| | CODE | TEMPERATURE RANGE |
|---|---|---|
| J | LT | -58 to +500° F (-50 to +260° C.) |
| | MT | -58 to +900° F (-50 to +482° C.) |
| | | -292 to +932° F (-180 to +500° C) (LEAVE BLANK) |
| | HT | -292 to +1202° F (-180 to +650° C) (NOTE 5) |

| | CODE | SYSTEM |
|---|---|---|
| K | 2W | 2 WIRE (4 WIRE TOTAL WITH DUPLEX) |
| | | 3 WIRE (LEAVE BLANK) |
| | 4W | 4 WIRE (8 TOTAL WITH DUPLEX) |

| | CODE | ACCURACY |
|---|---|---|
| L | | ASTM E1137 CLASS B (LEAVE BLANK) |
| | CLA | ASTM E1137 CLASS A |

| | CODE | WELL TYPE | | |
|---|---|---|---|---|
| | | OD-1 | OD-2 | ID |
| M | 432 | .500 | .875 | .260 |

| | CODE | WELL MATERIAL |
|---|---|---|
| N | P | 304 STAINLESS STEEL |
| | Q | 310 STAINLESS STEEL |
| | R | 316 STAINLESS STEEL |
| | PLorRL | 304or316 S. S. (LOW CARBON) |
| | N | CARBON STEEL |
| | J | INCONEL 600 |
| | H | HASTELLY C276 |

| | CODE | "F" LENGTH |
|---|---|---|
| P | | IN INCHES (2.25" STD.) |

| | CODE | "U" LENGTH |
|---|---|---|
| Q | | IN INCHES |

| | CODE | FLANGE SIZE |
|---|---|---|
| R | | SPECIFY |

| | CODE | FLANGE RATING |
|---|---|---|
| S | | SPECIFY |

| | CODE | FLANGE TYPE |
|---|---|---|
| T | FF | FLAT FACE |
| | RF | RAISED FACE |
| | RJ | RING TYPE JOINT |

Notes:
(1) Standard Nipples - Steel, Schedule 40.
Standard Unions - Black Malleable Iron, 150#.
OPTIONAL STAINLESS STEEL
Nipples - 304 or 316 Stainless Steel, Schedule 40 or 80.
Unions - 304 or 316 Stainless Steel.
Example Ordering Code: 4AE 3/4 1/2 6(R or R80).
(2) Rated NEC class 1, Groups B, C and D.
(3) ATEX approved EEx d IIC, T6.
(4) Contact factory for other sheaths and element types.
(5) Standard in single construction, 3 wire, class B, Inconel sheath material.
(6) For an item that does not fall within the catalog description an (SP) can be added to the ordering code as part of a custom construction.

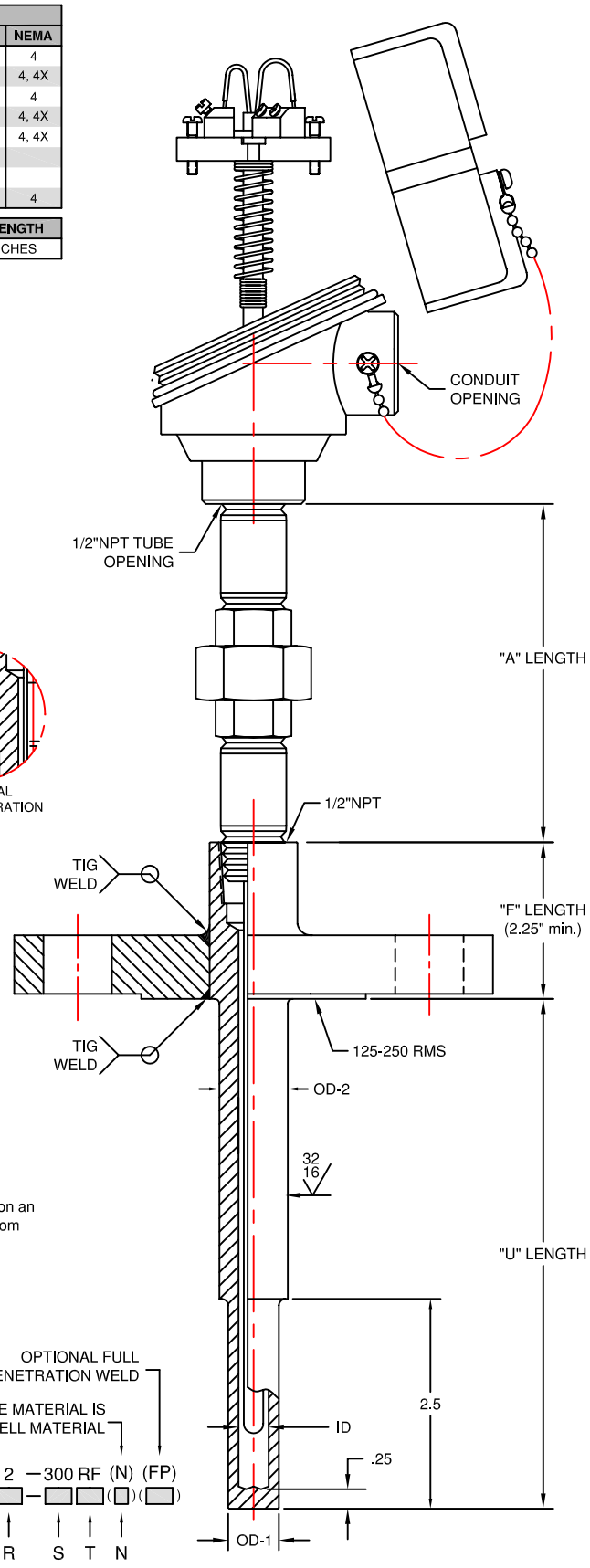


EXAMPLE: 4 AE 3/4 1/2 4 — D 14 PT5 LT 4W CLA — 432 R 2.25 — 8 — 2 — 300 RF (N) (FP)

RTD 432

A B C D E F G H J K L M N P Q R S T N

THERMO ELECTRIC

TEMPERATURE MEASUREMENT DESIGNER'S GUIDE
WWW.THERMO-ELECTRIC-DIRECT.COM

SECTION INRD

DRILLED FLANGED WELL ASSEMBLIES
STEPPED DOWN SHANK CONSTRUCTION

The information contained hereon shall be considered the sole property of Thermo Electric Company, Inc. The recipient thereof agrees not to disclose or reproduce said information to parties outside the recipients organization without the written permission of Thermo Electric.